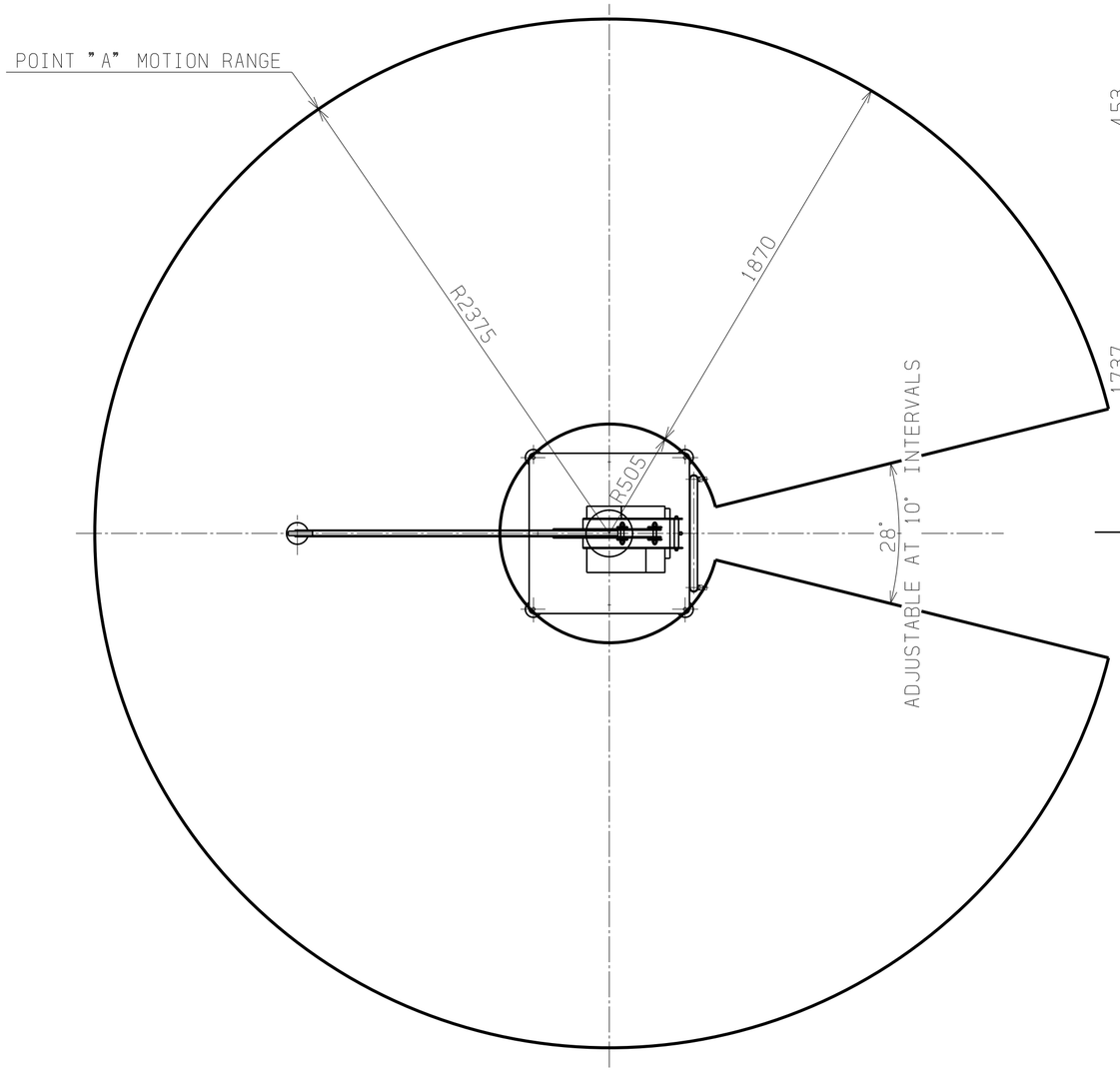

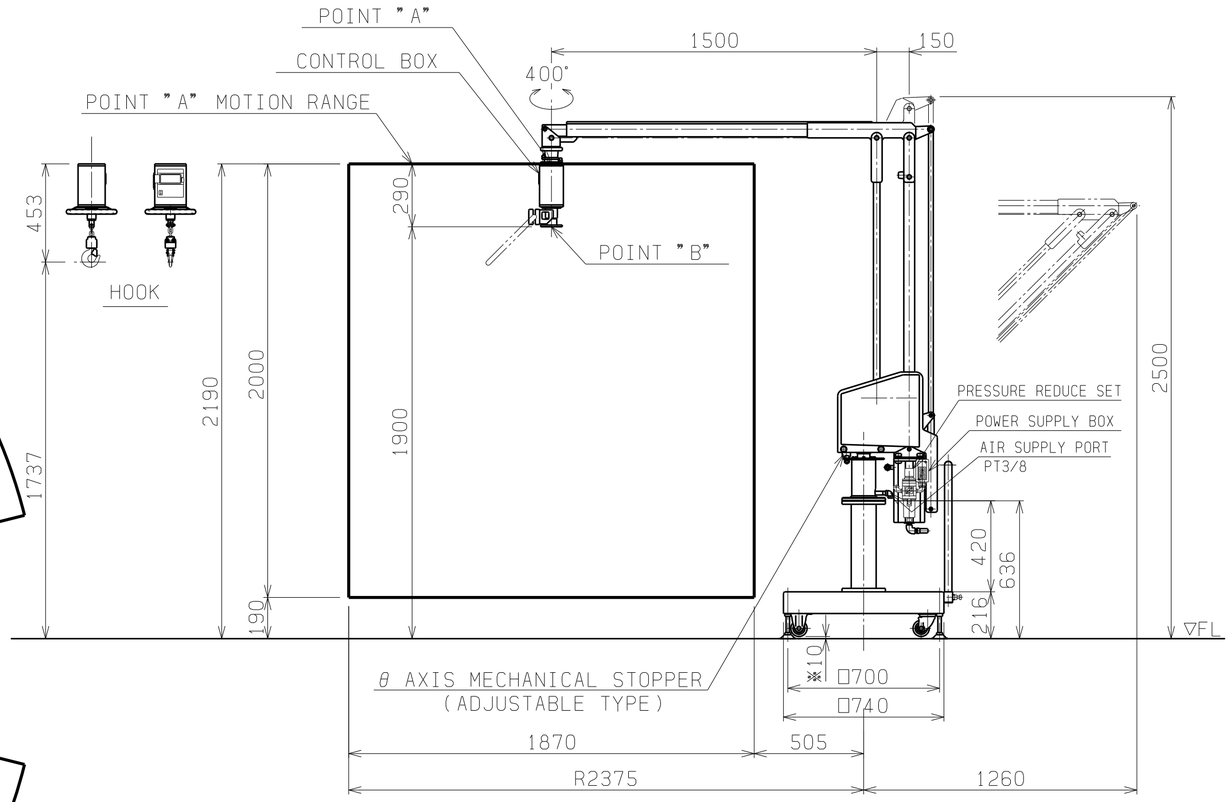

BALAMAN SPECIFICATIONS	
MODEL	U2BMG-38W θ AXIS MECHANICAL STOPPER U2BMG-38W
MAX. LOAD	38kg(BELOW POINT "A") 30kg(BELOW POINT "B")
MAX. RADIUS	R2375 mm
HORIZONTAL STROKE	1870 mm
VERTICAL STROKE	2000 mm
MAX. WORKING HEIGHT	2190 mm
MAX. MACHINE HEIGHT	2500 mm
AIR SUPPLY	0.54 MPaG
AIR CONSUMPTION	75NL/min (10 SEC CYCLE)
POWER SUPPLY	SINGLE-PHASE AC85~AC264V 50/60Hz 0.1KVA
CONTROL METHOD	
COATING	LN-15(JPMA BLACK) LN-93(JPMA WHITE)
MAIN UNIT MASS	APPROX. 140kg
BASE UNIT MASS	APPROX. 450kg
RELAY BOX MASS	8kg
WORKPIECE MASS	kg

REMARKS
ACCESSORIES: PRESSURE REDUCE SET
: POWER SUPPLY BOX