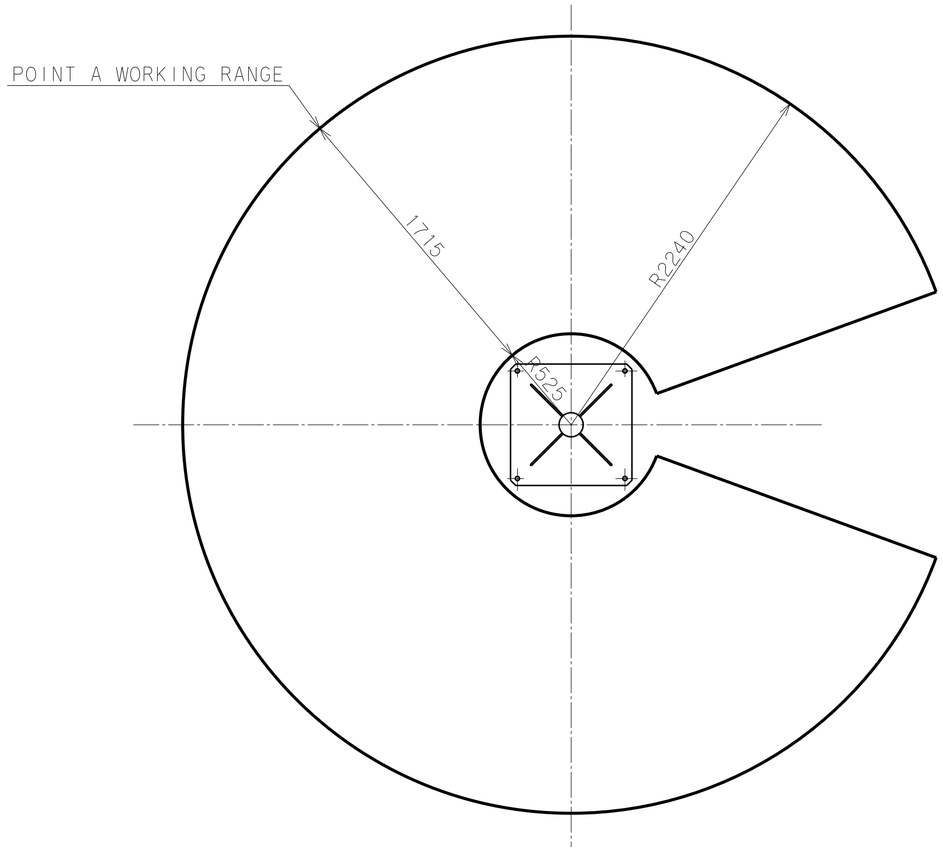

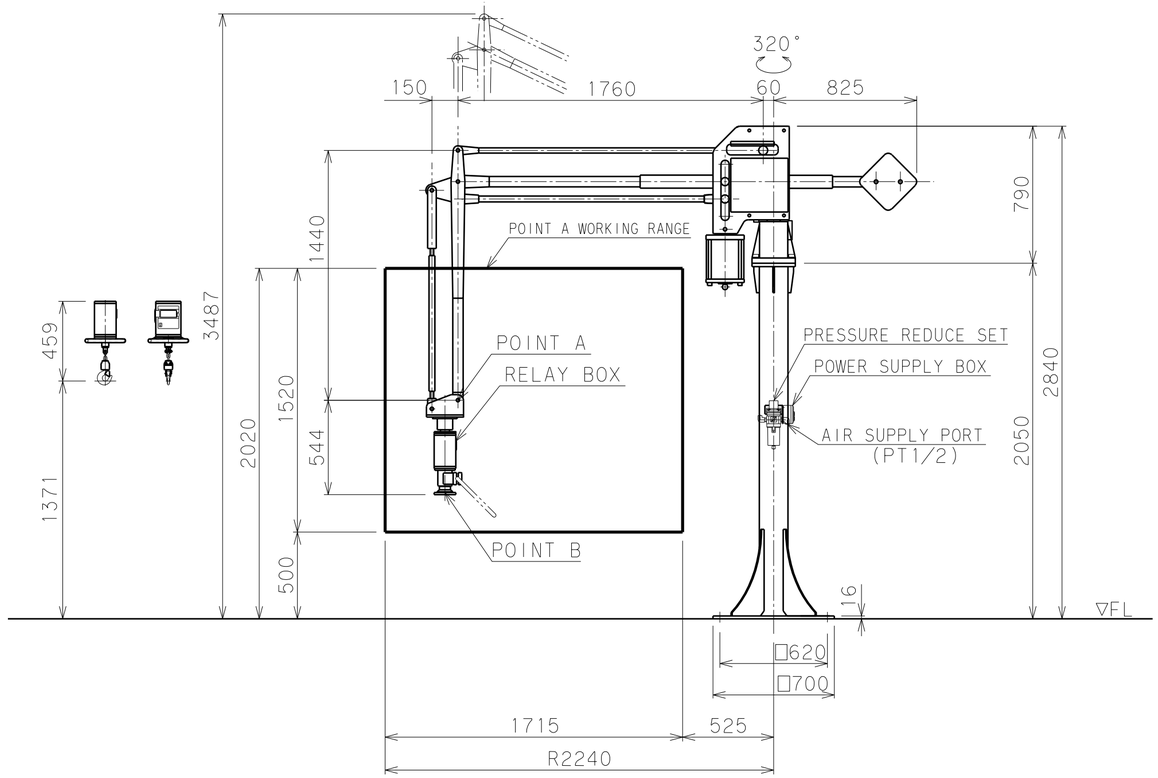

BALAMAN SPECIFICATIONS	
MODEL	U2BMF-150W
MAX.LOAD	142kg(BELOW POINT A) 125kg(BELOW POINT B)
MAX.RADIUS	R2240 mm
HORIZONTAL STROKE	1715 mm
VERTICAL STROKE	1520 mm
MAX.WORKING HEIGHT	2020 mm
MAX.MACHINE HEIGHT	3487 mm
AIR SUPPLY	0.54 MPaG
AIR CONSUMPTION	181L/min (10 SEC CYCLE)
POWER SUPPLY	SINGLE-PHASE AC85~AC264V 50/60Hz 0.1KVA
CONTROL METHOD	
COATING	LN-15(JPMA BLACK) LN-93(JPMA WHITE)
MAIN UNIT MASS	APPROX. 275kg
BASE UNIT MASS	APPROX. 130kg
SWIVEL UNIT MASS	5kg
RELAY BOX MASS	12kg
WORK PIECE MASS	kg

REMARKS
ACCESSORIES:PRESSURE REDUCE SET
:POWER SUPPLY BOX