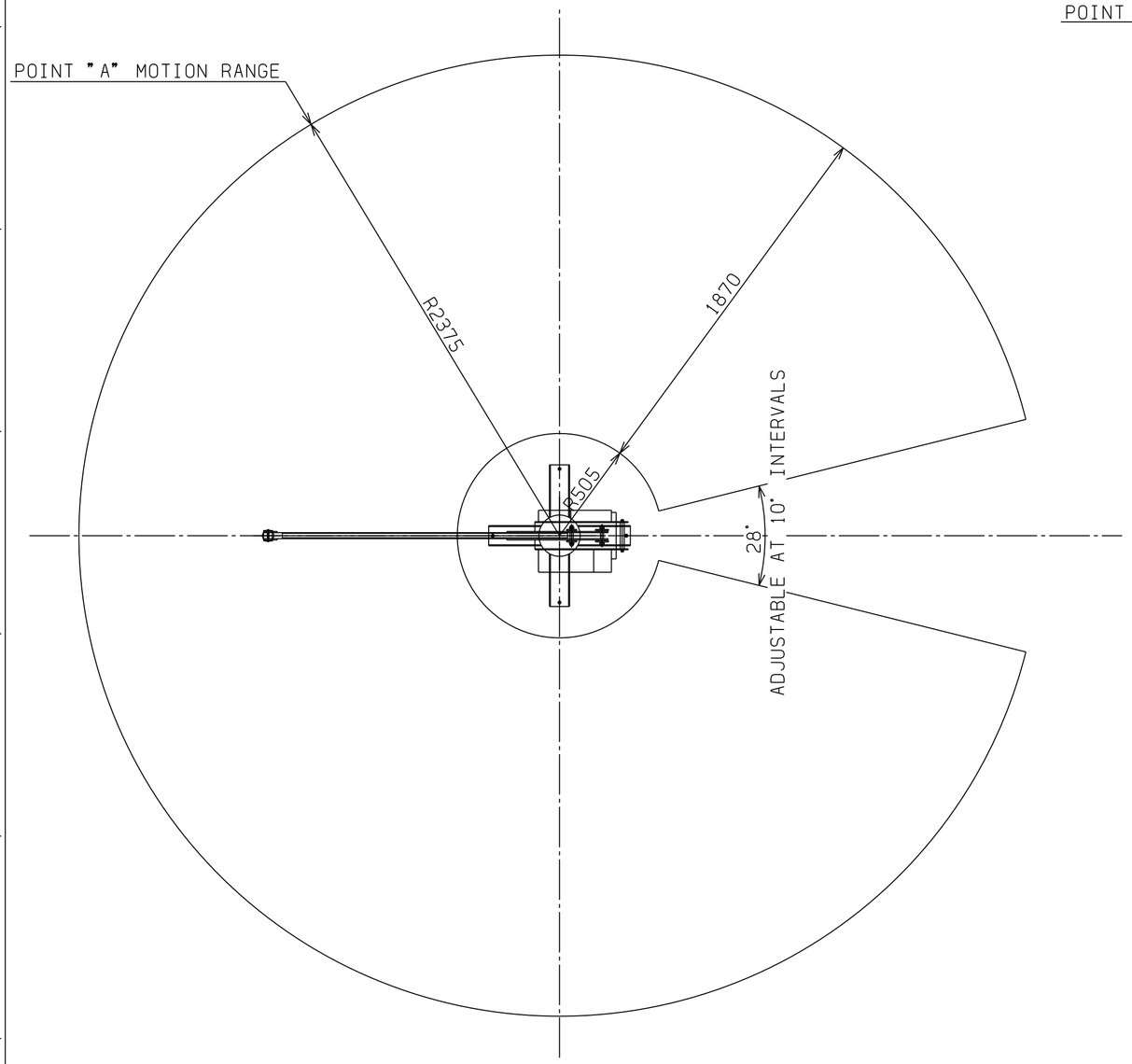

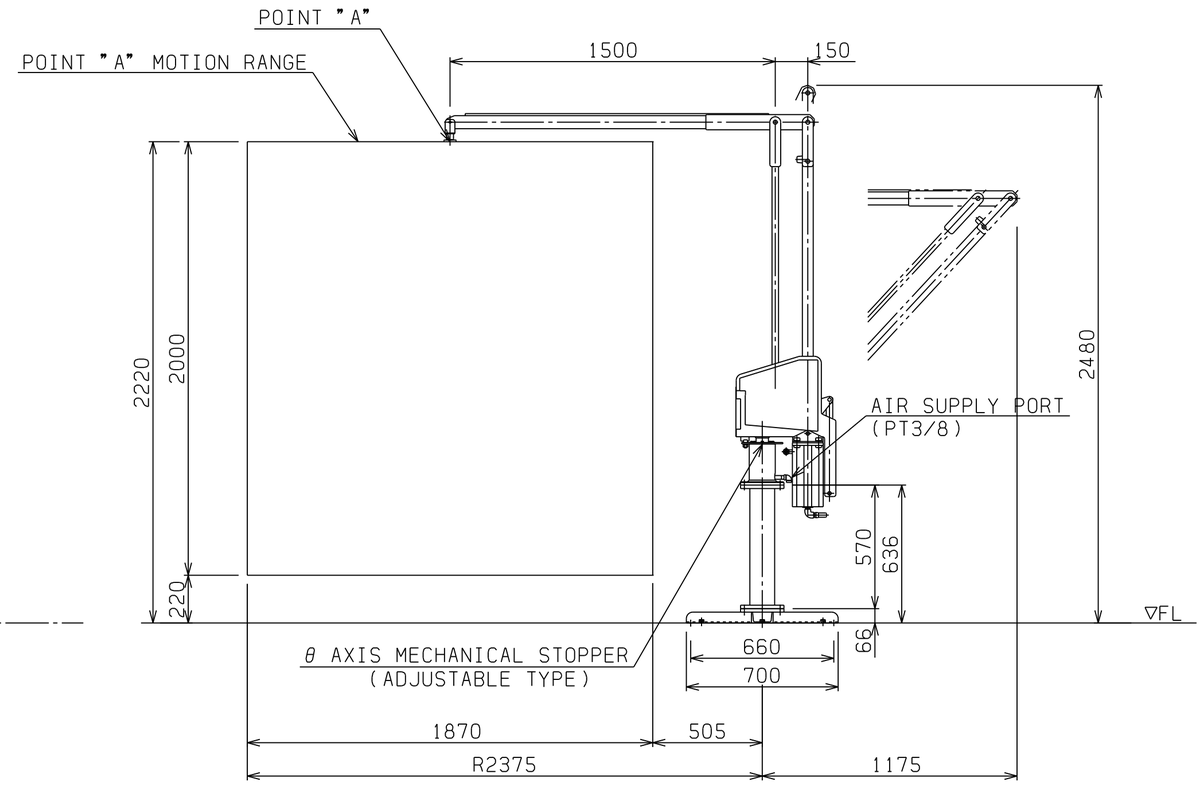

BALAMAN SPECIFICATIONS	
MODEL	BMG-38S θ AXIS MECHANICAL STOPPER (ADJUSTABLE TYPE)
MAX. LOAD	38kg
MAX. RADIUS	R2375 mm
HORIZONTAL STROKE	1870 mm
VERTICAL STROKE	2000 mm
MAX. WORKING HEIGHT	2220 mm
MAX. MACHINE HEIGHT	2480 mm
CONTROL METHOD	
AIR SUPPLY	0.49 MPaG
AIR CONSUMPTION	75NL/min (10 SEC CYCLE)
COATING	MAIN BODY & BASE 5.5PB4.7/9.4 (MUNSELL NO.) END-EFFECTOR 10R5.5/14.5 (MUNSELL No.)
MAIN UNIT MASS	Approx. 100kg
BASE MASS	Approx. 28kg
REMARKS PRESSURE REDUCE SET	