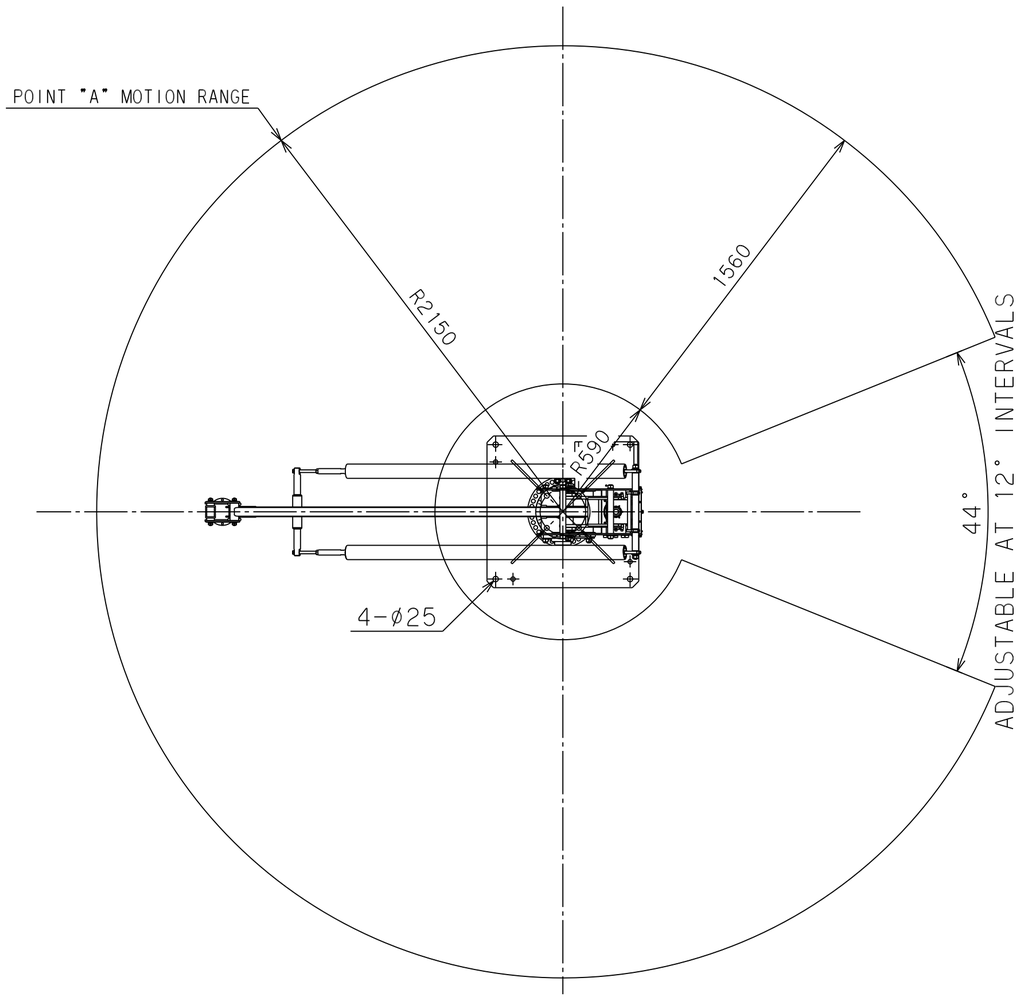

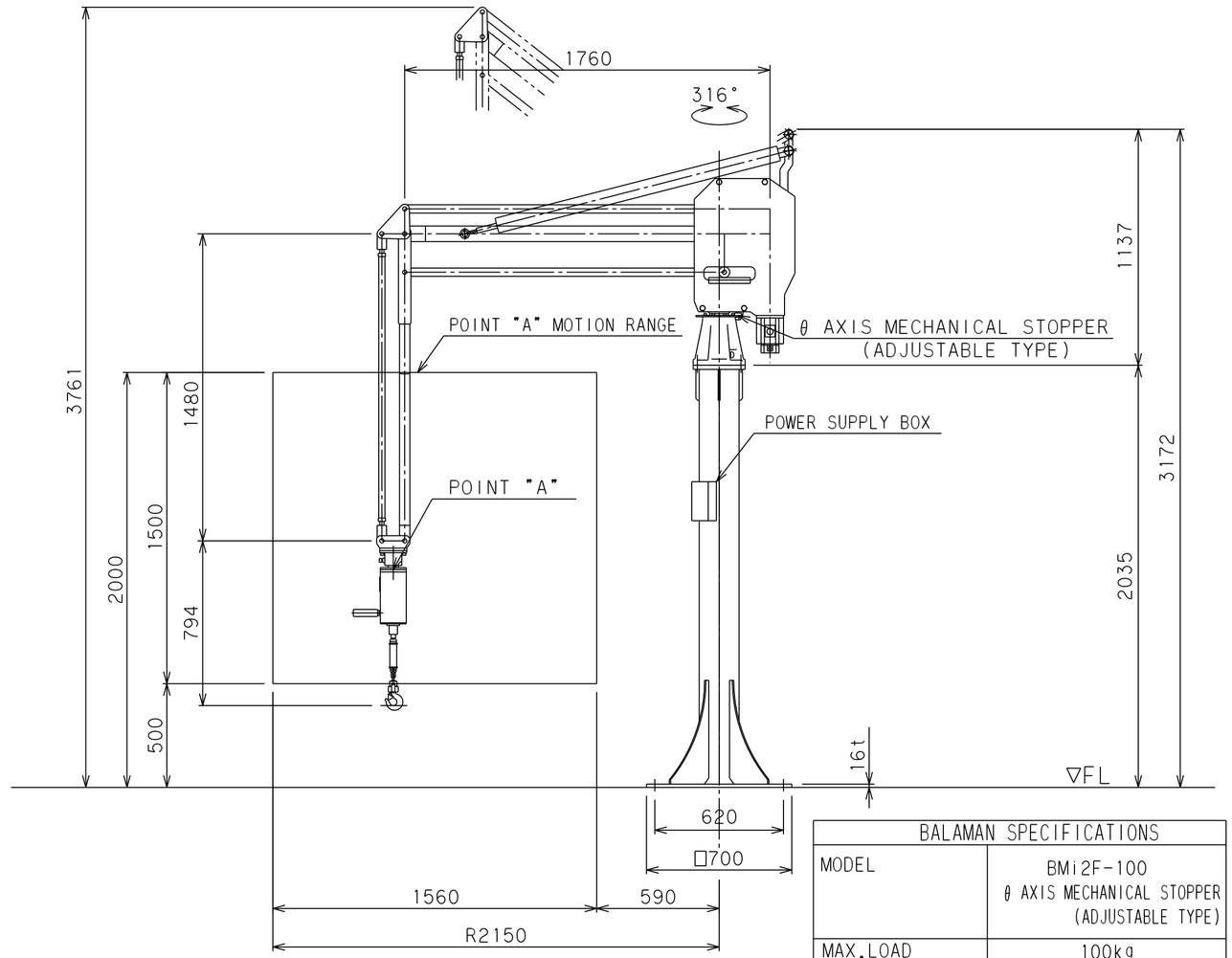

BALAMAN SPECIFICATIONS	
MODEL	BMi2F-100 θ AXIS MECHANICAL STOPPER (ADJUSTABLE TYPE)
MAX.LOAD	100kg
MAX.RADIUS	R2150 mm
HORIZONTAL STROKE	1560 mm
VERTICAL STROKE	1500 mm
MAX.WORKING HEIGHT	2000 mm
MAX.MACHINE HEIGHT	3761 mm
LIFTING SPEED	500 mm/s
POWER SUPPLY	Three-Phase AC200/220V±10% 50/60Hz 3.0kVA
CONTROL SYSTEM	CRANE AND BALANCE
COATING	MAIN BODY & BASE F-58(BLUE) G-63(SILVER) END-EFFECTOR 10R5.5/14.5 (MUNSELL No.)
MAIN UNIT MASS	APPROX. 205kg
BASE UNIT MASS	APPROX. 190kg
REMARKS ACCESSORIES: POWER SUPPLY BOX	